*VERT – TOP TO BOTTOM

Ship loose items:
NONE

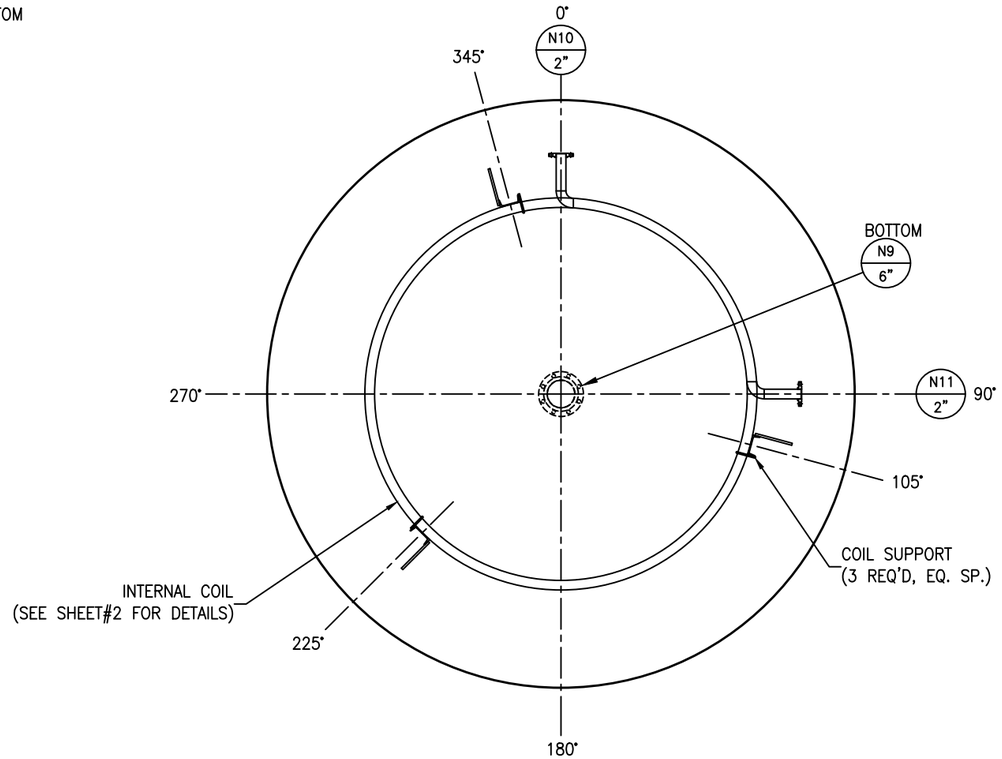

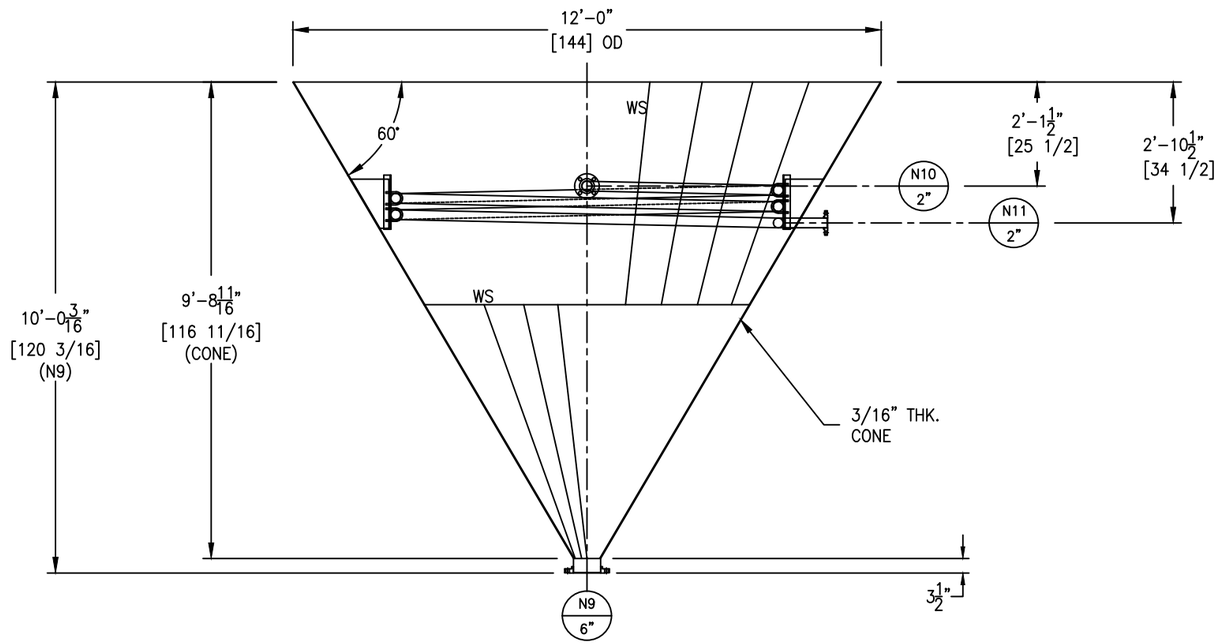

FC-14 GT-11

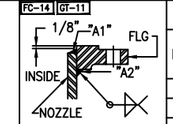

FIGURE NO. 1

FC-14 GT-11

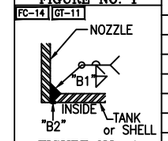

FIGURE NO. 4

FC-14 GT-11

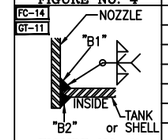

FIGURE NO. 7

SA-30 FC-14

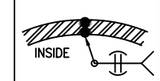

CONE THK. < 5/16"

FIGURE NO. 9

NOZZLE SCHEDULE

MARK	SERVICE	SIZE	RATING	TYPE / STYLE	NECK SCHED.	PROJECTION EXT. (℄)	PROJECTION INT. (MIN.)	WELD FIGURE	REPAD SIZE (WIDTH X THK.)	WELD SIZE "A1"	WELD SIZE "A2"	WELD SIZE "B1"	WELD SIZE "B2"	WELD SIZE "C1"	WELD SIZE "C2"
N9	DISCHARGE	6"	150#	RFSO	40S	SEE DWG.	–	1,4	–	1/4	7/16	3/16	3/16	–	–
N10	COIL INLET	2"	150#	RFSO	40S	SEE DWG.	SEE DWG.	1,7	–	3/16	1/4	3/16	3/16	–	–
N11	COIL OUTLET	2"	150#	RFSO	40S	SEE DWG.	SEE DWG.	1,7	–	3/16	1/4	3/16	3/16	–	–

MATERIALS OF CONSTRUCTION

	VESSEL
SHELL	–
CONE BOTTOM	SA240–304/304L
RIM ANGLE	–
NOZZLE NECKS	SA312–304/304L WLD
NOZZLE FLANGES	SA182F–304/304L
MANWAY NECKS	–
MANWAY FLANGES	–
GASKETS	–
BOLTS/STUDS	–
NUTS	–
REPADS	–
COUPLINGS	–
SUPPORTS/HOLD DOWNS	–
LIFTING LUGS	–
VACUUM RINGS	–
INSULATION RINGS	–
GROUND LUG	–
BAFFLE	–
LADDER	–
INTERNAL COIL	SA312–304/304L WLD & SA403–304/304L WPB
INTERNAL COIL SUPPORT	SA479–304/304L & SA240–304/304L
HANDRAIL CLIPS	–
PLATFORM	–
PLATFORM CLIPS	–
DIPTUBE SUPPORT	–
JACKET SHELL	–
JACKET HEADS	–
JACKET NOZZLE NECKS	–
JACKET NOZZLE FLANGES	–

DESIGN DATA

	VESSEL
DESIGN AND FAB. CODE	API650 AS APPLICABLE
CERT. STAMP REQ'D.	NO
DESIGN PRESSURE	ATM
DESIGN TEMPERATURE	280° F
MIN. DESIGN METAL TEMP.	–20° F @ ATM
OPERATING PRESSURE	–
OPERATING TEMPERATURE	–
JOINT EFFICIENCY HEADS	0.70
JOINT EFFICIENCY SHELL	0.70
CORROSION ALLOWANCE	0"
SPECIFIC GRAVITY	1.0
EARTHQUAKE ZONE	–
WIND LOAD	–
STRESS RELIEF	NOT REQ'D
RADIOGRAPHIC EXAM	NOT REQ'D
DYE PENETRANT EXAM	SEE NOTE 5
MAGNETIC PARTICLE EXAM	NOT REQ'D
HYDROSTATIC TEST	–
PNEUMATIC TEST	2 PSIG / GAUGE #1
COIL HYDRO TEST	52 PSIG / GAUGE #17
JKT CERT. STAMP REQ'D.	–
JKT DESIGN PRESSURE	–
JKT DESIGN TEMPERATURE	–
JKT MIN. DESIGN METAL TEMP.	–
JKT OPERATING PRESSURE	–
JKT OPERATING TEMPERATURE	–
JKT JOINT EFFICIENCY HEADS	–
JKT JOINT EFFICIENCY SHELL	–
JKT HYDRO TEST	–

VESSEL FINISH

INTERIOR WELD TREATMENT:	SAV TANK STANDARD
EXTERIOR WELD TREATMENT:	SAV TANK STANDARD
SAV TANK FINISHING STANDARD:	SEE NOTE 4
INSULATION:	–
PAINTING:	–

VESSEL CAPACITY AND WEIGHTS

OPERATING CAPACITY	–
FULL CAPACITY	2,740 GAL.
EMPTY SHIPPING WEIGHT	2,300 LBS.
WEIGHT FULL OF WATER	–
WEIGHT FULL OF PRODUCT	–

QUALITY CONTROL

ENG. _____ DATE: _____

Q.C. _____ DATE: _____

This drawing is issued for customer approval. please review, make approval changes (if any) in red. check the appropriate box, sign & date.

- ☐ Approval – no changes. Please proceed with fabrication.
- ☐ Approved as noted. Please proceed with fabrication
- ☐ Not approved. Please make changes and resubmit.

Customer signature _____ Date _____

GENERAL NOTES

1.) COVER ALL FLANGES, OPENINGS & MACHINED SURFACES PRIOR TO SHIPMENT UNLESS OTHERWISE NOTED.
2.) BOLT HOLES TO STRADDLE 0° & 180° UNLESS OTHERWISE NOTED.
3.) ASME MATERIALS TO CONFORM TO THE FOLLOWING: FLANGES – B16.5, FITTINGS – B16.9 & COUPLINGS – B16.11.
4.) PICKLE ALL EXTERIOR WELDS. PASSIVATE INTERIOR & EXTERIOR OF VESSEL.
5.) VACUUM BOX ALL CONE WELDS TO ITS EXTENT. ALL REMAINING WELDS TO BE DYE PEN FROM INSIDE.

REVISIONS

REV	D.BY	C.BY	DATE	DESCRIPTION
2				AS BUILT
1	RS	NP	11/5/25	CERTIFIED
0	RS	AD	10/28/25	APPROVAL

Savannah Tank & Equipment Corp.
1517 Telfair Road, Savannah, GA 31415
(912) 233–8902

DRAWN BY: RS
CHK'D BY: AD
APPROVED BY: NP
SCALE: 1/2" = 1'–0"

BURKE INDUSTRIAL
TANK BOTTOM CONE
EQUIP. #
CUST. PO # BUR100225.1

DRAWING NO.: 099–25–1 SHT 1 OF 2 REV. SET 1

FC-14

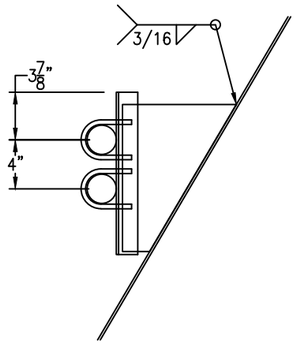

COIL SUPPORT @105° DETAIL

SCALE: 1 1/2" = 1'-0"

FC-14

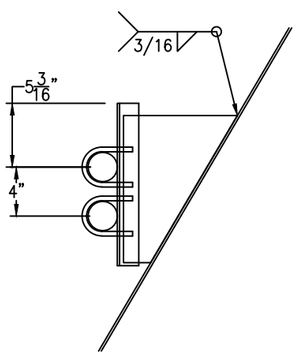

COIL SUPPORT @225° DETAIL

SCALE: 1 1/2" = 1'-0"

FC-14

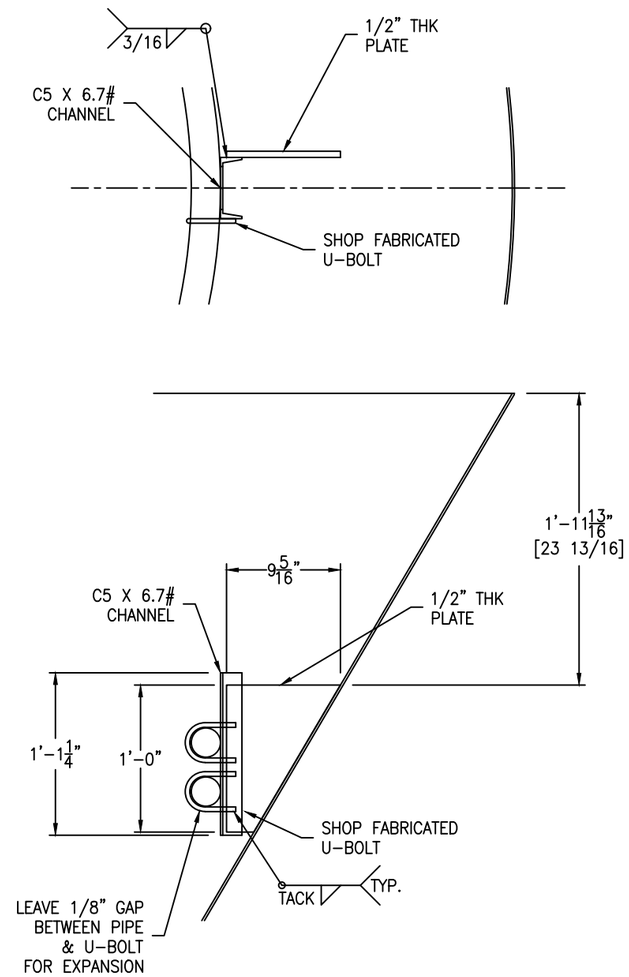

COIL SUPPORT DETAIL

SCALE: 1 1/2" = 1'-0"

FC-14

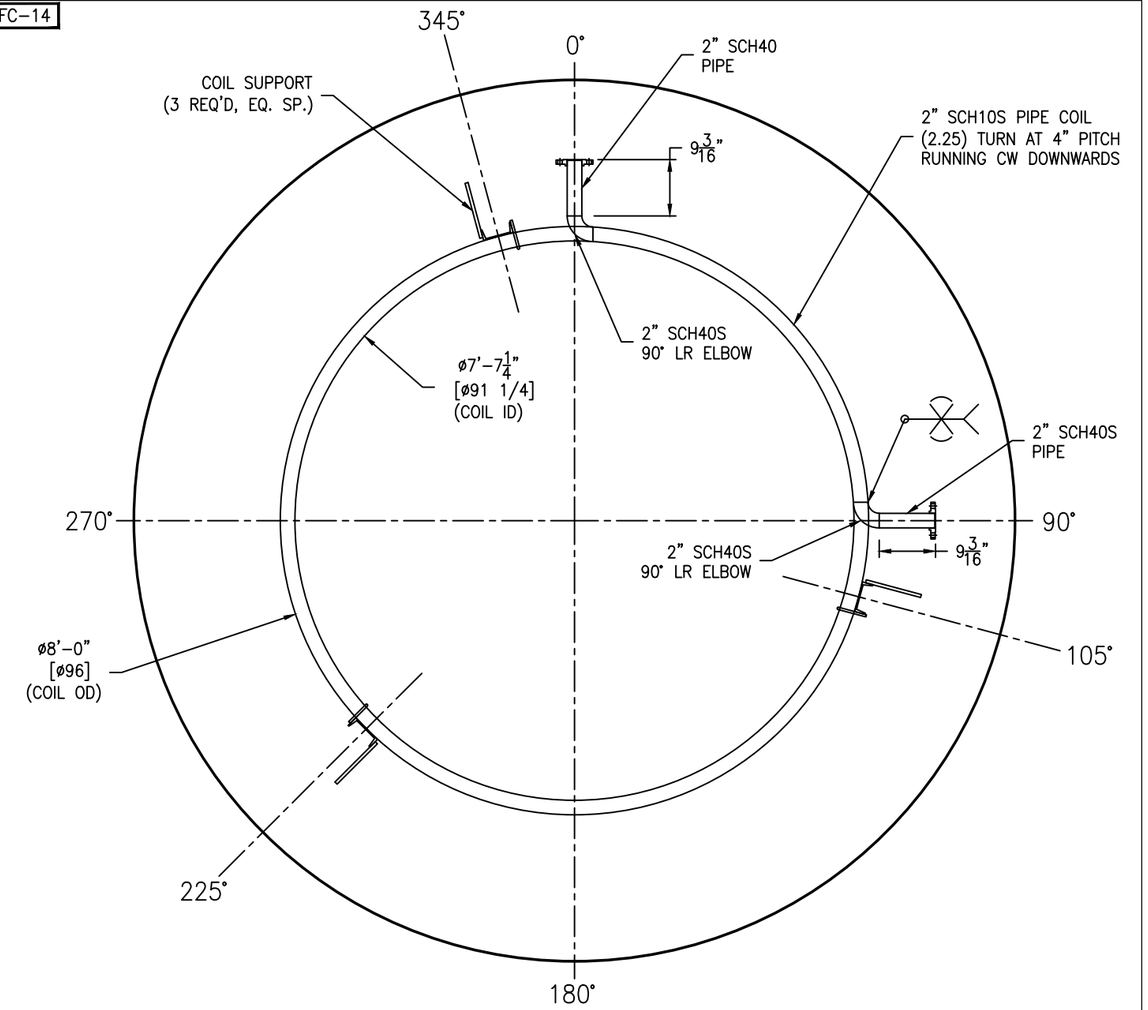

INTERNAL COIL DETAIL

SCALE: 3/4" = 1'-0"

FC-14

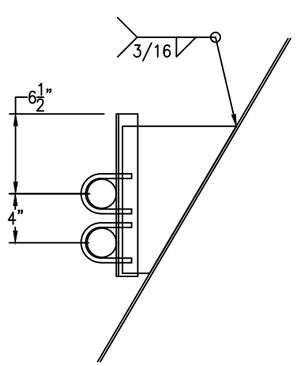

COIL SUPPORT @345° DETAIL

SCALE: 1 1/2" = 1'-0"

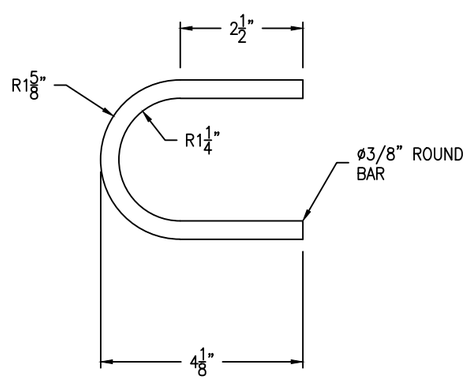

U-BOLT DETAIL

(6 REQ'D) SCALE: 6" = 1'-0"

REV	D.BY	C.BY	DATE	DESCRIPTION
2				AS BUILT
1	RS	NP	11/5/25	CERTIFIED
0	RS	AD	10/28/25	APPROVAL

⚠ REVISIONS

Savannah Tank & Equipment Corp.
1517 Telfair Road, Savannah, GA 31415
(912) 233-8902

DRAWN BY: RS
CHK'D BY: AD
APPROVED BY: NP
SCALE: 3/16" = 1'-0"

BURKE INDUSTRIAL
TANK BOTTOM CONE
EQUIP. #
CUST. PO # BUR100225.1

DRAWING NO.: 099-25-2 SHT 2 OF 2 REV. SET 1